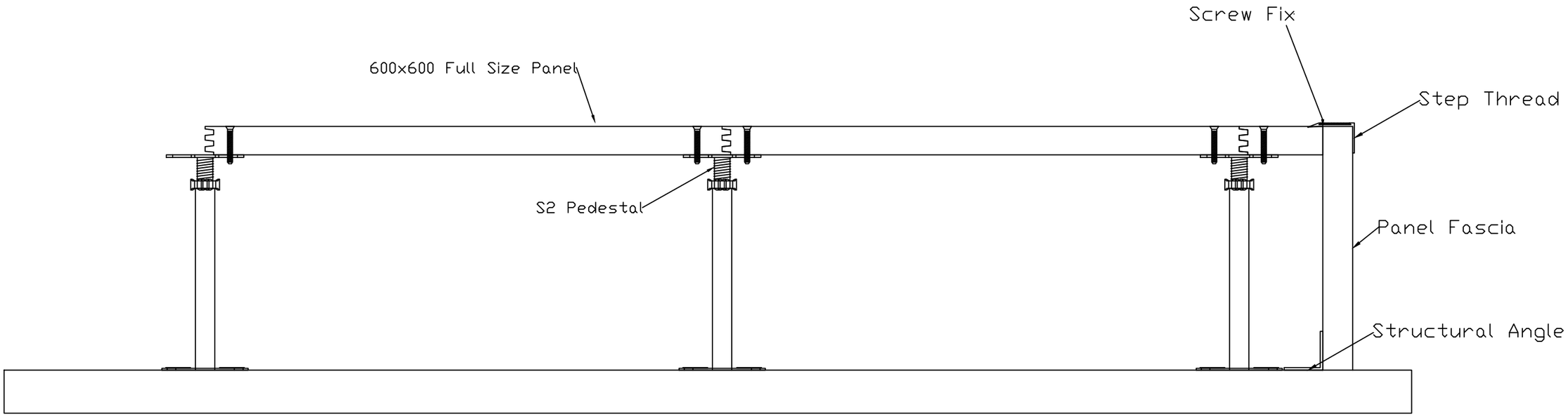

No.	Rev.	By	Chk	App	Date

Drawing Originator:

ASP access floors

ASP ACCESS FLOORS
32 PRIME DRIVE, SEVEN HILLS
NSW, 2145, AUSTRALIA
Tel: 0061 (02) 9620 9915
Fax: 0061 (02) 9620 9918
Web: www.aspfloors.com.au

Client:

Project:

Title: CS-IL Fascia Detail

Drawn:	Author	Drawing No.	
Date:			
Scale:	1:5		
Size:	A3	Rev.	A