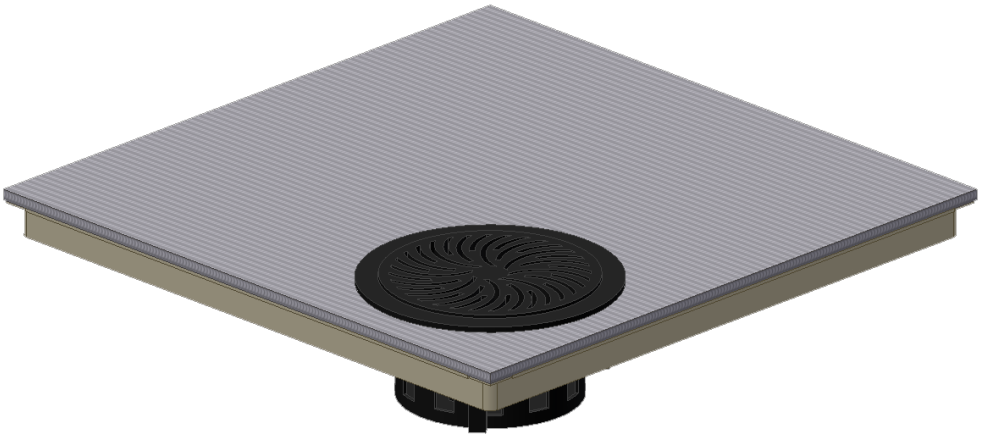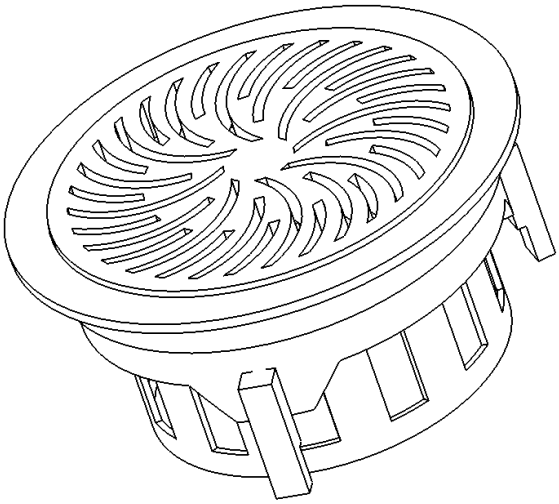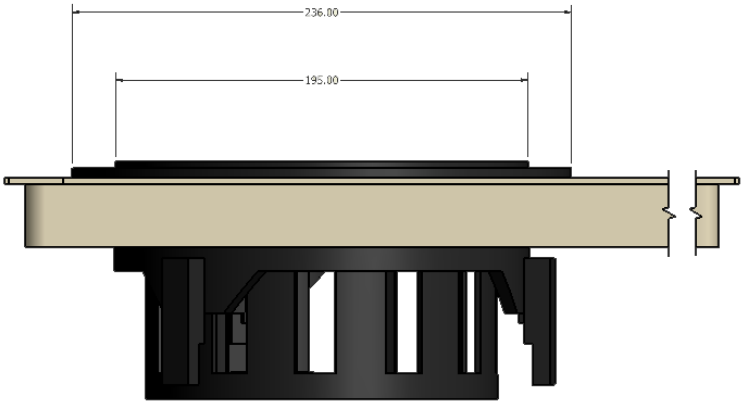Circular Air Diffuser